Scan Me
to watch
Assembly
Instructions
YouTube

Kai
By
i5 Industries

Assembly: 36”/48” Bookcase

MODELS: BC36 36 Bookcase
BC48 48 Bookcase

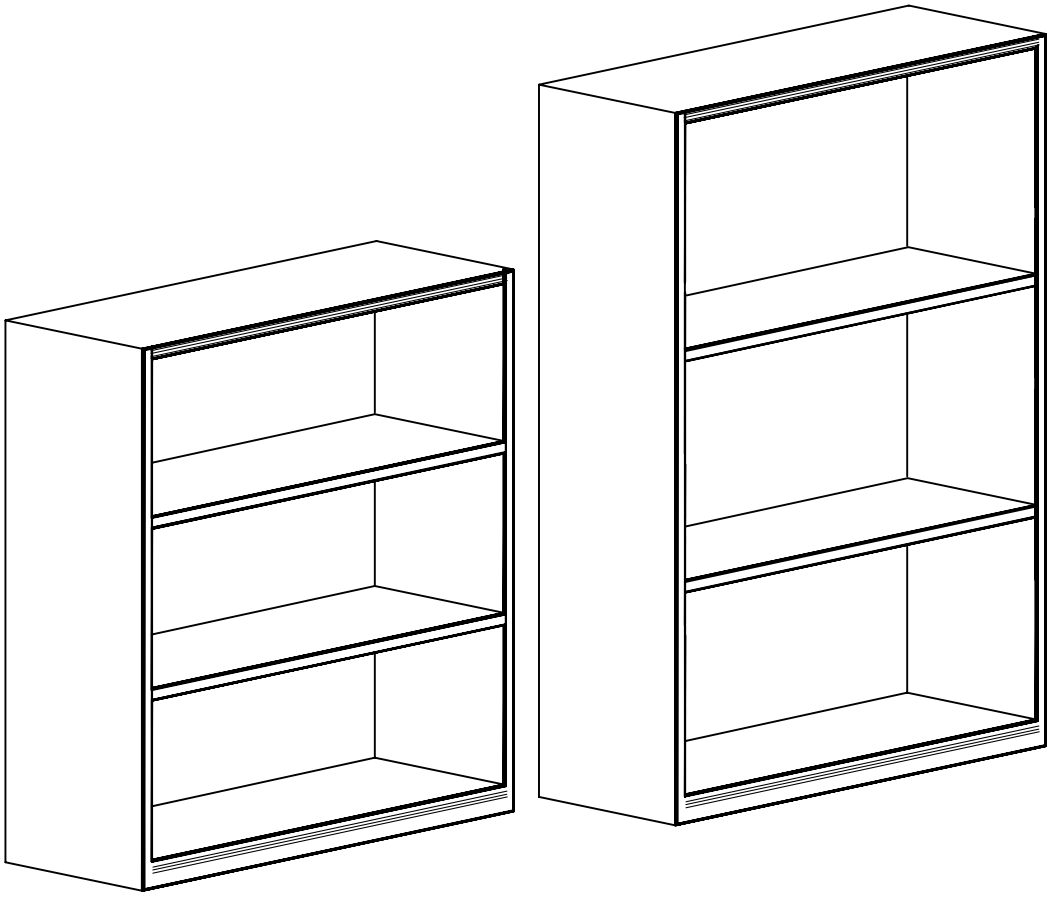

- Place all laminated parts on a clean and smooth surface such as a rug or carpet to avoid the parts from being scratched.
- Check to be sure that you have all parts and hardware.
- Remove all wrapping materials, including staples & packing straps before you start to assemble.
- Line up holes for cam locks.
- Put on sticker caps last.
- Keep all hardware parts out of reach of children.

Required tools:

Flathead or Philips
#2 Screwdriver

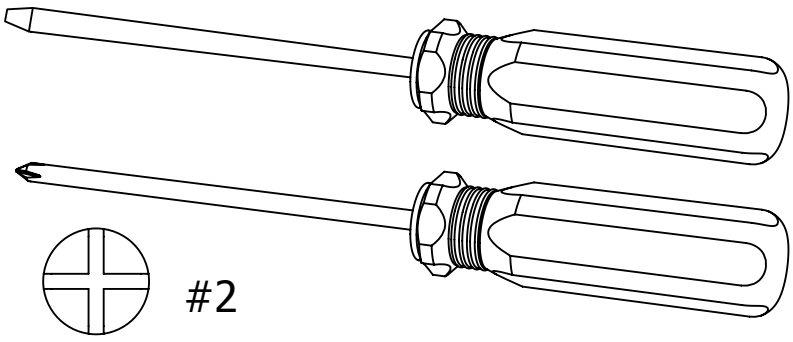

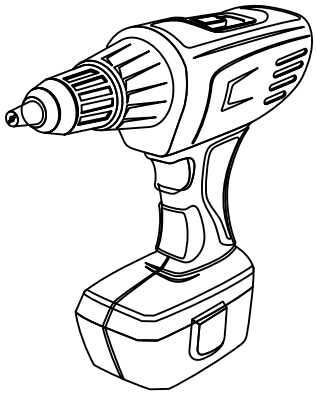

PART	QTY.	
BACK	1	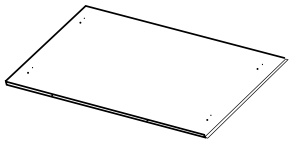
BOTTOM	1	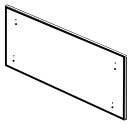
KICK PLATE	1	
LEFT SIDE	1	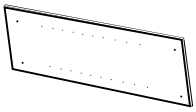
RIGHT SIDE	1	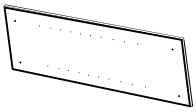
TOP	1	
ADJUSTABLE SHELF	2	

PART	QTY.	
A Metal Pin	9	
B Cam Lock	9	
C Set Screw	9	
D Cap Sticker	5	
E Adjustable Glide	4	
F Wood Dowel	18	
K Screw	2	
T Shelf Dowel	8	

Step 1

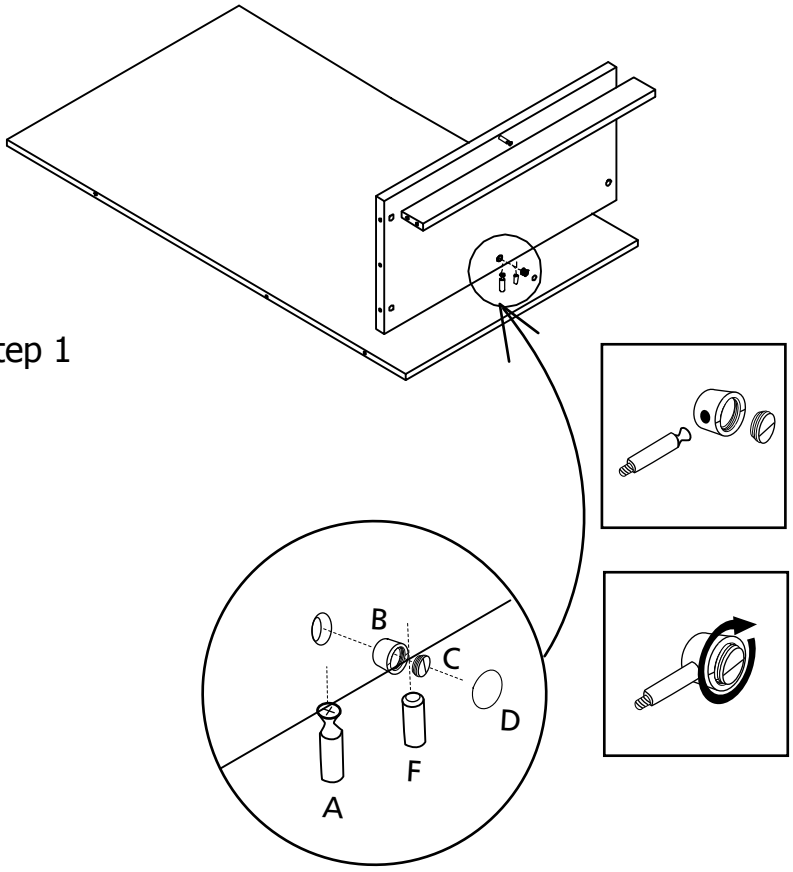

Step 2

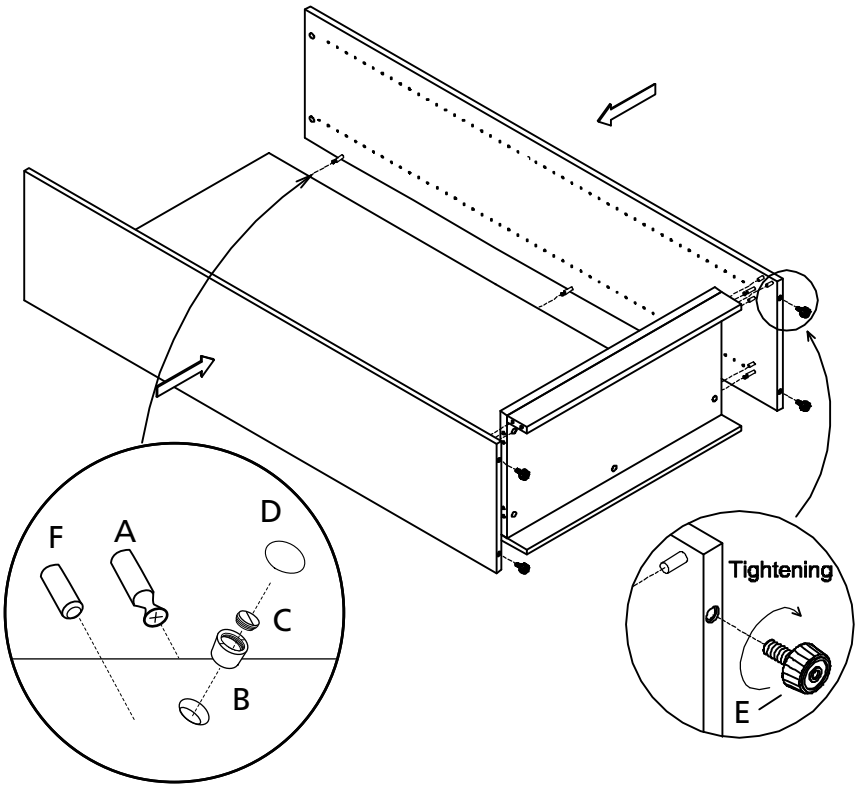

Note: Place cap stickers on any exposed holes.

Step 3

